Pharmacy Round Shelf

FPDGROUP Ltd

The pharmacy Round Shelf is the ideal complement to the popular deep drawer pharmacy drawer. When filled with fast-moving medication packages, the Round Shelf ensures very high storage density and direct immediate access. Using a combination of the deep drawer full-height bays (for slow movers) and the Round Shelf (for fast movers) saves both time and space with a comparable investment volume since, overall, fewer drawer bays are required and access to the majority of fast-moving packages is much quicker.

Advantages

- Direct access from the point of sale to fast-moving medication
- Very good visibility ensures that packages are quickly located
- Product filling and removal can take place simultaneously from both sides
- Simple and easy refilling thanks to patented magnetic mechanism
- Observance of the FIFO principle* thanks to filling from the back. First in First Out process improves date stock controls.

Simple operation through rotatable shelves

Quick removal of packages

Easy refilling thanks to magnetic storage segments

Observance of FIFO principle thanks to filling from the back

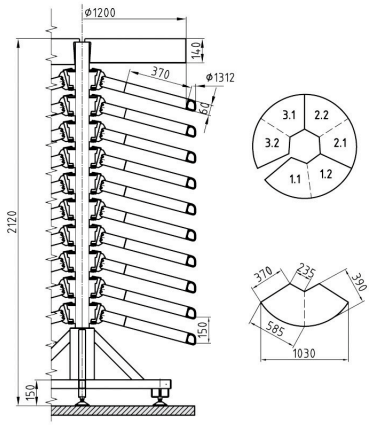

FPD-6532 Pharmacy Round Shelf 1200mm

Diameter:	1200mm (Storage segments 1312mm)
Height:	2120mm
Footprint (base):	1.4m²
Storage area:	6m²
Capacity:	Up to 400 articles (channels) with up to 3,400 packages
Number of shelves:	10
Depth of shelves:	370mm

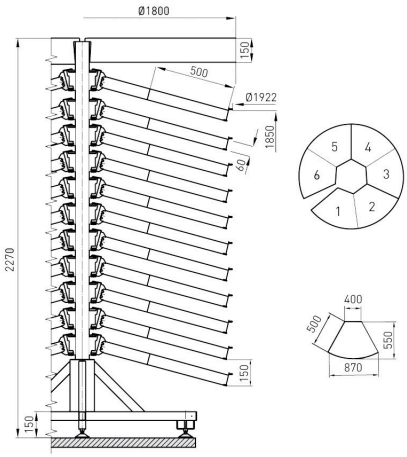

FPD-6533 Pharmacy Round Shelf 1800mm

Diameter:	1800mm (Storage segments 1922mm)
Height:	2270mm
Footprint (base):	2.9m²
Storage area:	13m²
Capacity:	Up to 700 articles (channels) with up to 8,000 packages
Number of shelves:	11
Depth of shelves:	500mm

Tel +44 (0)208 099 3568 www.fpd-group.co.uk info@fpd-group.co.uk Fax: +44 (0)1833 348 180